52805.06.10

DWG NO. H48655

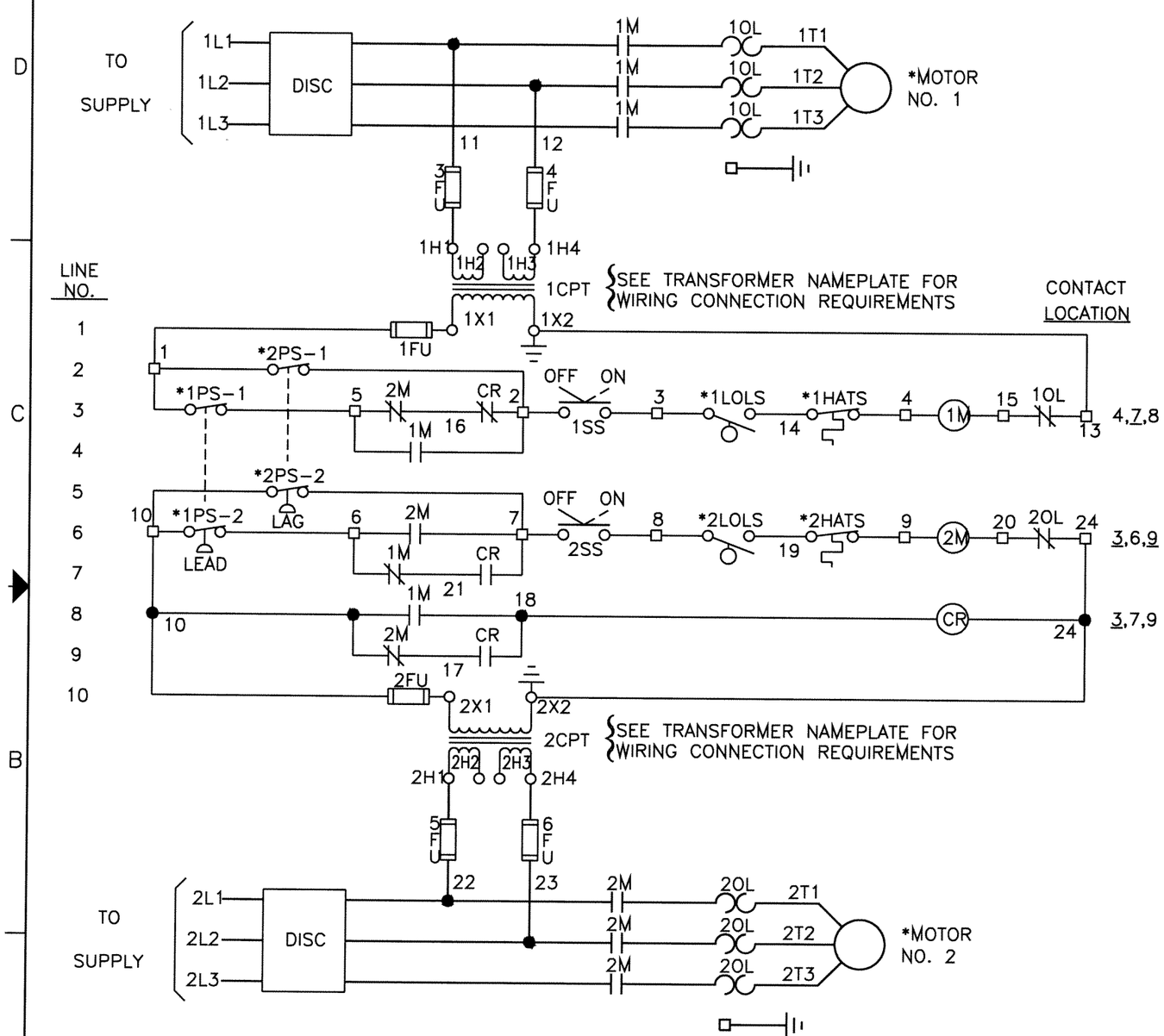

LEGEND

CPT	– TRANSFORMER, CONTROL 120/1/50–60
CR	– RELAY, CONTROL
DISC	– SWITCH, FUSIBLE DISCONNECT
* EDV	– VALVE, ELECTRIC DRAIN 120/1/50–60
ETM	– METER, ELAPSED TIME
FU	– FUSE, CONTROL CIRCUIT
* HATS	– SWITCH, HI AIR TEMPERATURE (WITH RESET)
* LOLS	– SWITCH, LOW OIL LEVEL
M	– COIL, MOTOR STARTER
OL	– OVERLOAD, MOTOR STARTER
* PS	– SWITCH, PRESSURE (OR VACUUM)
SS	– SWITCH, SELECTOR
TDR	– RELAY, TIME DELAY (10 MIN.)
⌘	– LIGHT, TRANSFORMER TYPE
–□–	– TERMINAL POINTS

CONTROL PANEL OPTIONS

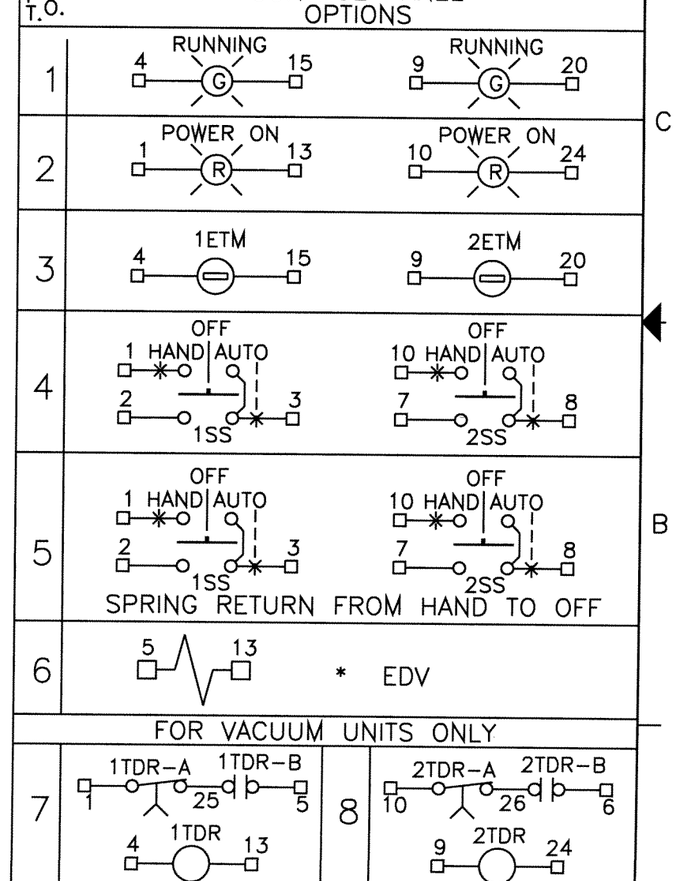

NOTES

1. (*) FURNISHED, MOUNTED & WIRED OUTSIDE OF CONTROL PANEL, IF REQUIRED BY ORDER.
2. CIRCUIT SHOWN IN NORMAL POSITION DE–ENERGIZED.
3. ALL WIRING TO BE IN ACCORDANCE WITH NEC.
4. LAST WIRE NUMBER USED – 26.
5. ALL WIRING TO BE MARKED IN ACCORDANCE WITH THIS SCHEMATIC.
6. LAG SWITCH TO HAVE LOWER PRESSURE/ VACUUM SETTING THAN LEAD SWITCH.

PROPRIETARY NOTICE

THIS DOCUMENT CONTAINS CONFIDENTIAL AND TRADE SECRET INFORMATION, IS THE PROPERTY OF INGERSOLL-RAND COMPANY, AND IS GIVEN TO THE RECEIVER IN CONFIDENCE. THE RECEIVER BY RECEPTION AND RETENTION OF THE DOCUMENT ACCEPTS THE DOCUMENT IN CONFIDENCE AND AGREES THAT, EXCEPT AS AUTHORIZED IN WRITING BY INGERSOLL-RAND COMPANY, IT WILL: (1) NOT USE THE DOCUMENT OR ANY COPY THEREOF OR THE CONFIDENTIAL OR TRADE SECRET INFORMATION THEREIN; (2) NOT COPY THE DOCUMENT; (3) NOT DISCLOSE TO OTHERS EITHER THE DOCUMENT OR THE CONFIDENTIAL OR TRADE SECRET INFORMATION THEREIN; AND (4) UPON COMPLETION OF THE NEED TO RETAIN THE DOCUMENT, OR UPON DEMAND, RETURN THE DOCUMENT, ALL COPIES THEREOF, AND ALL MATERIAL COPIED THEREFROM.

Copyright © 1982 Ingersoll-Rand Company All Rights Reserved

WARNING: The export or reexport of this drawing or a product produced by this drawing is subject to U.S. Export Administration Regulations and other applicable governmental restrictions or regulations.

THIRD ANGLE PROJECTION

SCALE N/A
DATE 2-12-88
DRAWN D. ADAMS
CHECKED JB
DSN. APP
ENGR. APP

INGERSOLL-RAND Co.
RECIPROCATING COMPRESSOR DIVISION
SMALL COMPRESSOR BUSINESS UNIT
CAMPBELLSVILLE, KY

REF. COMBINATION ALTERNATOR PANEL

TITLE SCHEMATIC – ELECTRICAL

SIZE	DWG NO.	REV
C	H48655	05

SHEET 1 OF 1

RCE–ESC–11/97